ML610Q461/462/463 Reference Board User's Manual

ML610Q461/462/463 Reference board is prepared by LAPIS Semiconductor to have you study the operations of ML610Q461, ML610Q462 or ML610Q463.

The board is arranged so that necessary components are mounted by you according to your purpose, then only minimum necessary components are mounted on the board by LAPIS Semiconductor for brief use of ML610Q461/462/463

By using the board with "uEASE on-chip debug emulator" (hereinafter referred to "uEASE") and "free sample U8 Development Tools CD-ROM" which is bundled in the package of uEASE not only Software development/debugging but also writing Flash ROM in the devices are capable.

This board also works in stand alone mode with external power suppy without uEASE.

Before starting works with this board, read below carefully and understand notices.

1. The board features
   - Incorporates ML610Q461, ML610Q462 or ML610Q463
   - Supports flash ROM programming and on-chip debugging (using TEST1_N and TEST0 pins)
   - High extendibility; Through-holes for your peripheral board are equipped with microcontroller pins
   - The power supply used can be selected (uEASE or peripheral board)
   - Prepared the pad to mount parts (parts necessary for microcontroller operation)

2. The board hardware specifications

Please refer to the reference schematics for detail on connections of each hardware parts.

Embedded microcontroller	・ U1: ML610Q461, ML610Q462 or ML610Q463 (The part name is labeled on the solder side of the board.)
Embedded parts	・ X1, C4, C5: 32.768KHz resonator and capacitors.
	・ PWR: Jumper for input power supply switch (3pin pin-header and short pin)
	・ CNUE: Connector for on-chip debug emulator (14pin connector)
	・ C1,C7, C9, C11: Capacitors for power supply
Pads for mounting	・ CNU1 to CNU4: Pads for peripheral board connectors (34pin x 4、2.54mm pitch)
	・ IN0, CS0, RCT0, RT0, RS0, CVR0, IN1, CS1, RS1, RT1, CVR1 Pads for RC oscillation type ADC parts
	・ C12, C13, C14: Capacitors for LCD bias generation circuit
	・ SP1, SP2, SP3. SP4: Pads for LCD operating or short
Other useful pads	・ DVDD, GND, RCM
Operating voltage	・ +1.25V to +3.6V
Board size	・ 71.12 x 60.96 mm

3. Parts layout

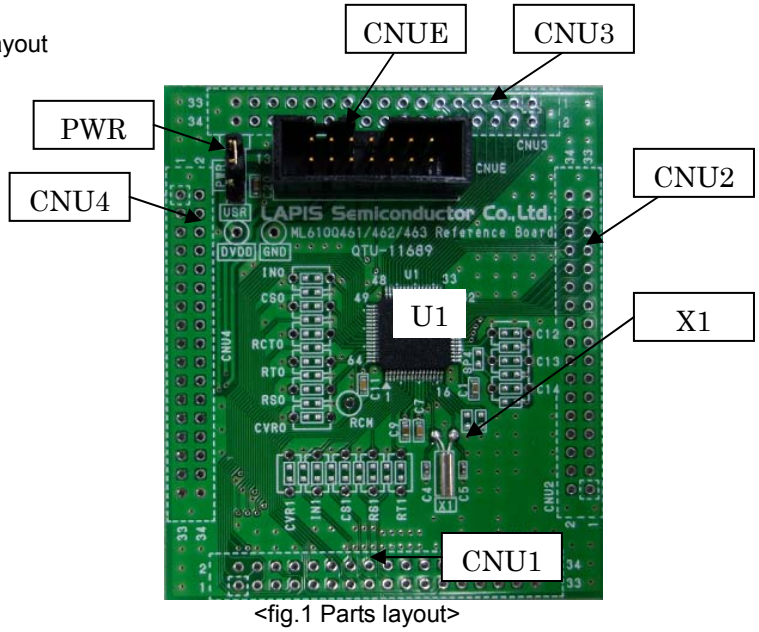

<fig.1 Parts layout>

4. Notes on use

(1) The information contained herein can change without notice owing to product and/or technical improvements.
Before using the product, please make sure that the information being referred to is up-to-date.

(2) Before using this board, read carefully and understand the contents of the ML610Q461/462/463 user's manual and the uEASE user's manual.

(3) The engineering sample of ML610Q461/462/463 might be mounted on the board.
Therefore, please confirm the characteristic finally by using MP of ML610Q461/462/463 and customer's mass production boards.

(4) LAPIS Semiconductor will not provide any support for this board, but the board can be exchanged with a new product only when it has an initial failure.

(5) Notes when the PWR jumper is set to USR side and the uEASE is connected.
Turn on the power supply of the peripheral board after starting the uEASE.
Moreover, Stop the uEASE after turning off the power supply of the peripheral board.

(6) When the PWR jumper is set to the uE side, the ability to supply power of the uEASE is +3.3v/100mA.

(7) There is a possibility of short the circuit when using it on electroconductive so that the board may have the pattern on the solder side.
Therefore, please use the board on nonconductivity or put the protection parts on the solder side if necessary.

(8) When you use RC-ADC0:
Please modify the board according to the following procedure when you select the use of IN0 to CVR0 on the board.
(a) Please mount parts on the each pad of the IN0, CS0, RCT0, RT0, RS0 and CVR0.
The CVR0 should connect 0Ω resister or jumper wire, as shown in the fig.2.

(9) When you use RC-ADC1:
Please modify the board according to the following procedure when you select the use of IN1 to CVR1 on the board.
(a) Please mount parts on the each pad of the IN1, CS1, CVR1, RT1 and RS1.
The CVR1 should connect 0Ω resister or jumper wire, as shown in the fig.2.

(10) When you use LCD
Please set up C12, C13, C14, SP1, SP2, SP4 according to the specification of the LCD panel to be used.

	1/2 bias	1/3 bias(default)
C12	Unmount	0.1uF capacitor
SP1	Short	Open
C13	0.1uF capacitor	Unmount
SP2	Open	Short
C14	Open	0.1uF capacitor
SP4	Short	Open

(11) The following parts are mounted on the board:
U1, CNUE, PWR, X1, C1, C4, C5, C7, C9, C11, C20

(12) The following parts are not mounted on the board:
CNU1, CNU2, CNU3, CNU4, IN0, CS0, RCT0, RT0, RS0, CVR0, IN1, CS1, RCT1, RT1, RS1, CVR1, SP1, SP2, SP3, SP4, SP5, SP6, SP7, SP8, SP40, SP41, SP42, SP43, SP44, C12, C13, C14, C18, C19

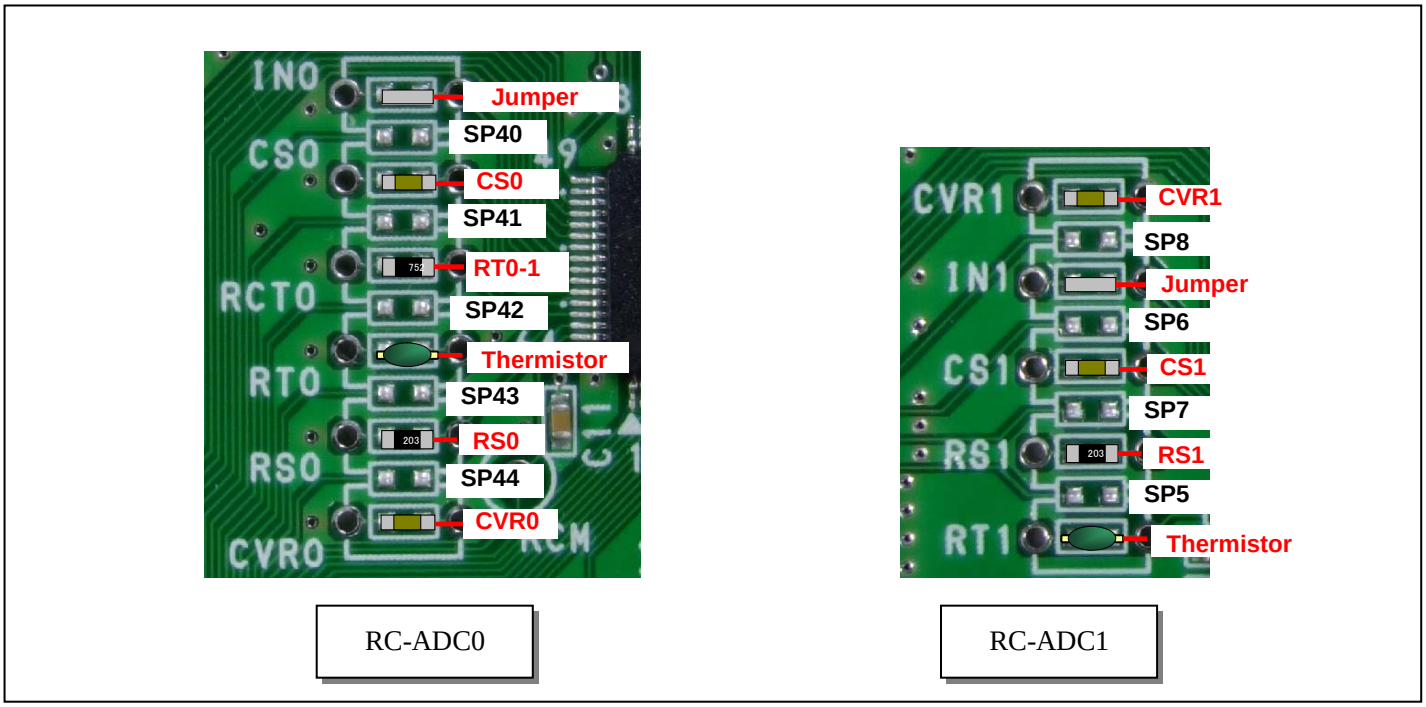

<fig.2 RC-ADC0 manufacturing>

5. Reference schematics:
The reference schematics of the board and the dimensional drawing are shown as follows.

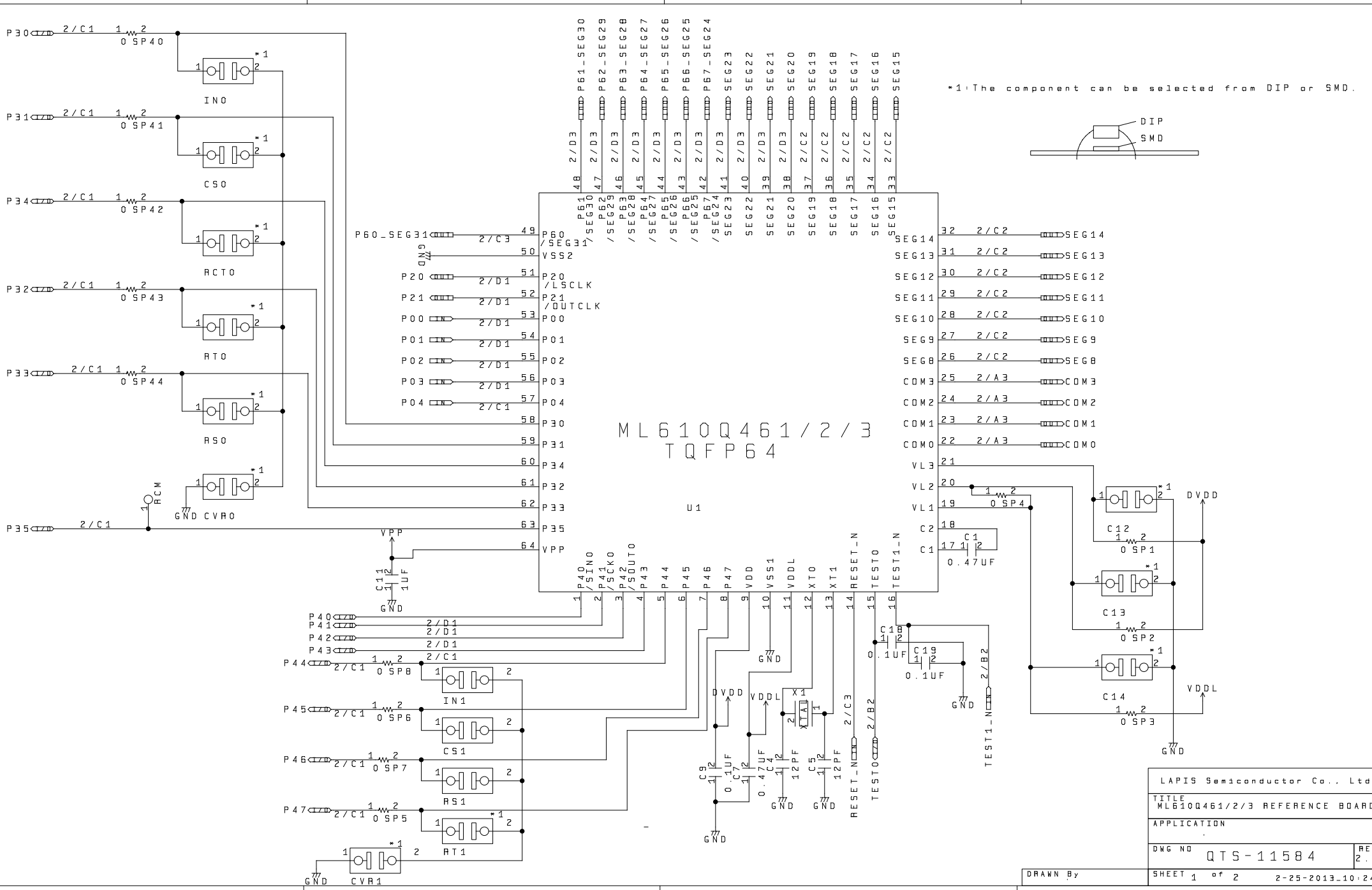

LAPIS Semiconductor Co., Ltd

TITLE ML610Q461/2/3 REFERENCE BOARD

APPLICATION

DWG NO QTS-11584

REV 2.0

DRAWN By

SHEET 1 of 2

2-25-2013_10:24

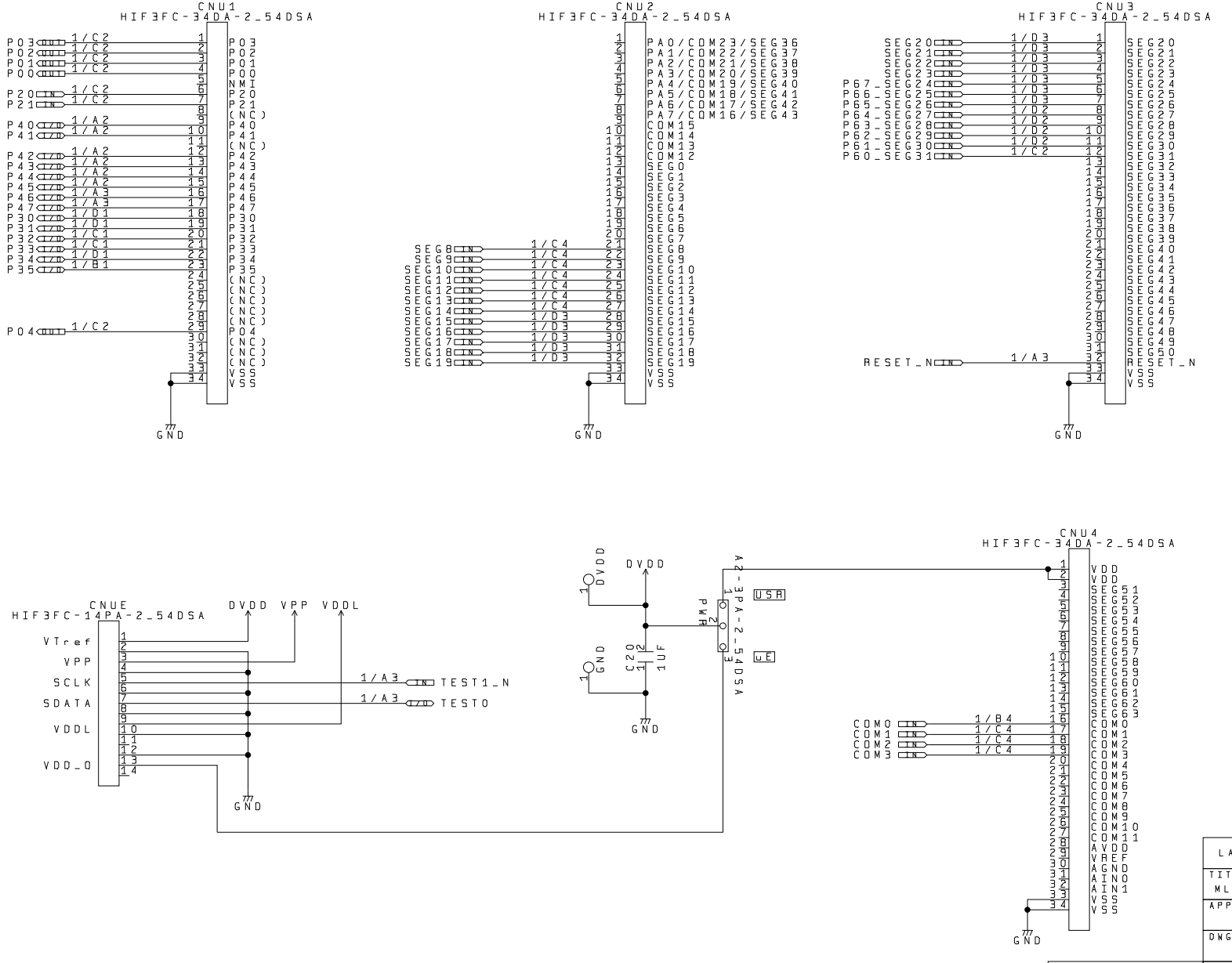

LAPIS Semiconductor Co., Ltd	
TITLE	ML610Q461/2/3 REFERENCE BOARD
APPLICATION	
DWG NO	QTS-11584
REV	1.0
DRAWN By	
SHEET 2 of 2	2-25-2013_11:14